LED3*BORO 13W

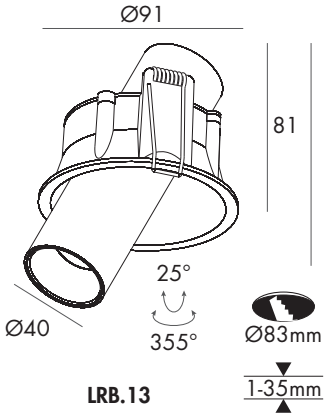

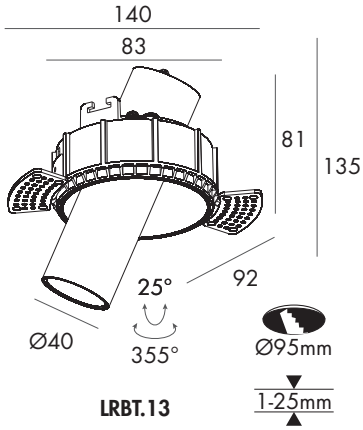

RÉFÉRENCES *REFERENCES*	CC	COULEUR *COLOR*	FLUX *LUMENS*	OP	OPTIQUE *BEAM ANGLE*	PUISSANCE *CONSUMPTION*	ALIMENTATION *POWER*
LBR.13-CC-OP Version ressort *Spring version* **LBRT.13-CC-OP** Version trimless *Trimless version*	**27K** = **30K** = **40K** =	2700 K 3000 K 4000 K	1180 lm 1210 lm 1300 lm	**24** = **36** = **60** =	24° 36° 60°	13 W	350 mA

LED CITIZEN COB - IRC 92+
LED CITIZEN COB - CRI92+

50 000 heures - L80 B10 à Ta = 25°C
50 000 hours - L80 B10 at Ta = 25°C

Aluminium peint poudre epoxy texturé
Aluminium textured painted epoxy powder

Convertisseur deporté non inclus
Converter excluded

-20°C / +45°C
-20°C / +45°C

Convection naturelle
Natural Convection

FINITIONS *FINISH*

☐ Blanc *White* ■ Noir *Black*

OPTIONS *OPTIONS*

Gestion DALI, DMX, 0-10V, KNX, Radiofréquence, Triac, Push Dim
DALI, DMX, 0-10V, KNX, Radio Frequency, Triac, Push Dim control